❶ Martellato — Martellato logo

❷ MADE IN ITALY MA0000 — Origin, food symbol and item code

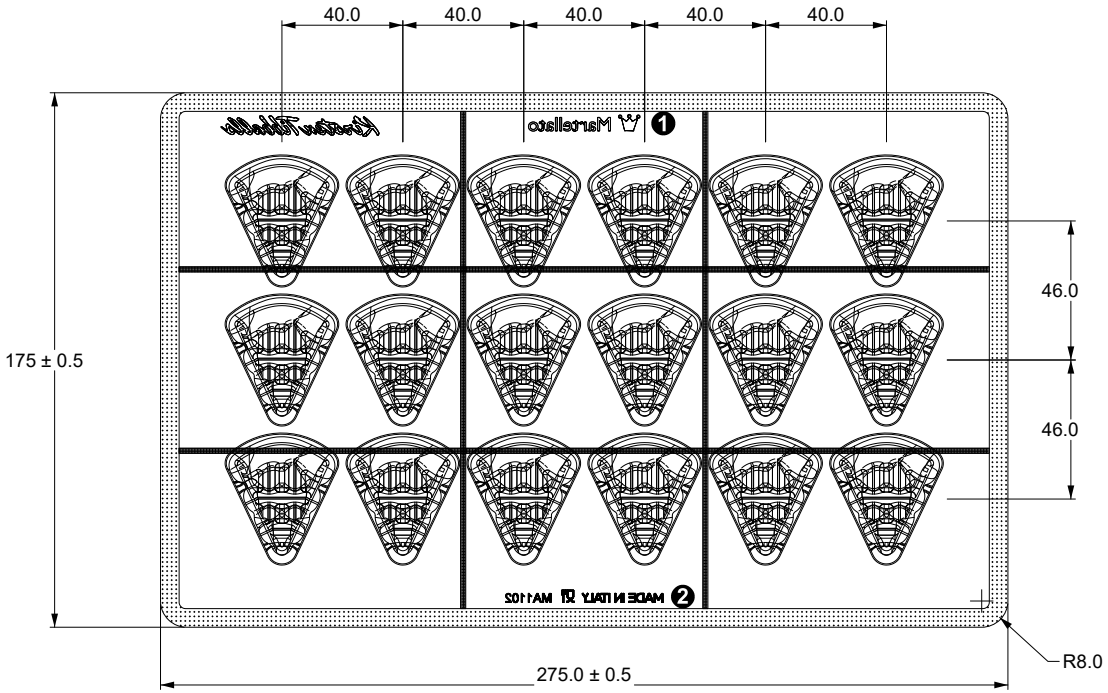

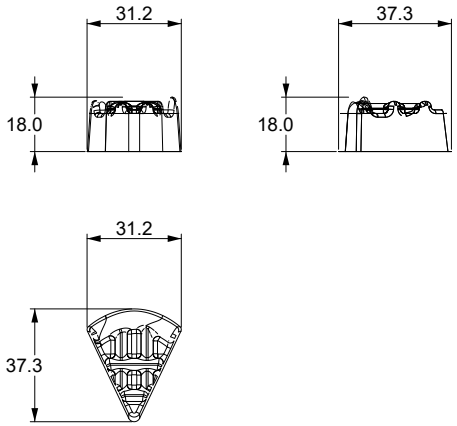

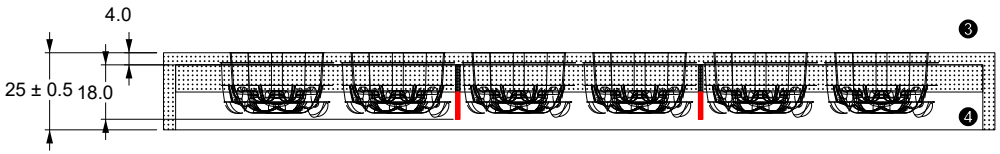

Martellato
Via Rovigo, 1/B - 35010 Vigonza (PD)
tel +39 049 7800155 - fax +39 049 8087744

Owner	Cod./Progetto	Size *	Pieces	Volume mm3	Weight	Layout	Wb. x	Wb. y
KIRSTEN	MA1102	31.2 x 37.3 h 18	18	9409	~10.8 gr	6 x 3	40	46

Plant code		Designer	Revisione /Rev.	UM	Tol.	Scale	ISO E
99MA1102	---	D.C.	26/03/2026_04	mm	± 0.5	A4 1:2.5	

Pos.	Description	
3	Surface at mirror-finish grade	
4	External sides with satin finish	
5	Photoengraving logo Martellato	
5	Materials	PETG
6	Colour	TRASPARENTE

* Cavity mold size - Chocolate retraction is not calculated

ti i diritti sono riservati all ' autore. La riproduzione e la divulgazione anche parziale di questo disegno sono vietate. E ' fatto espresso divieto di realizzazione di oggetti similari senza previo consenso dell 'au
All rights reserved. Any unauthorized use of this design, such as distributing, copying, modifying, or reprinting, is not permitted. Creation of derivative works is not permitted without the consent of the author.